TRUCK DRIVERS

GUIDE BOOK

OHIO STATE HIGHWAY PATROL

OFFICE OF FIELD OPERATIONS

LICENSING AND COMMERCIAL STANDARDS SECTION

MOTOR CARRIER ENFORCEMENT UNIT

OHIO DEPARTMENT OF PUBLIC SAFETY
EDUCATION · SERVICE · PROTECTION

Ohio State Highway Patrol
Office of Field Operations
Licensing and Commercial Standards Section
Motor Carrier Enforcement Unit

TRUCK DRIVERS

GUIDE BOOK

General Information 5

Contact Information 8
- Ohio State Highway Patrol, Motor Carrier Enforcement Unit District Headquarters & Scale Locations 8
- Platform Scale Facility 9
- State of Ohio Agencies & Departments 10
- United States Federal Agencies 10
- Trade Associations 10

Vehicle Registration & Motor Fuel Tax 11

Definitions 12

Commercial Driver License (CDL) 14

Driver's Hours of Service
- Property-Carrying Commercial Motor Vehicles 17
- Passenger-Carrying Commercial Motor Vehicles 21

Inspection, Repair & Maintenance 24

Safety Devices 26

Brakes 27

Load Securement 29

Wheel Protectors 31

Vehicle Size/ Special Hauling Permits 32

Motor Vehicle Weight Law 34

Motor Vehicle Weight Law Exceptions 37

Motor Vehicle Weight Law Restrictions 38

Bridge Formula Definitions 39

Bridge Formula Examples 40

Interstate Bridge Formula Reference Chart ORC 5577.04¶B 41

Non-Interstate Weight Formula 42

Non-Interstate Weight Formula Reference Chart ORC 5577.04¶D 43

This book has been prepared as a guide to applicable laws and regulations. State law may be more restrictive than Federal Regulations. For specific questions, please refer to the applicable local, state and federal laws and rules themselves. If you need an explanation or clarification of any law or rule, you should contact the appropriate agency.

Available online at www.statepatrol.ohio.gov.

General Information

The size of a commercial motor vehicle (height, width, length, weight, weight rating) will determine to what degree you will need to comply with state and federal safety regulations. These rules and regulations are found in the Federal Motor Carrier Safety Regulations (FMCSR) and the Ohio Revised Code (ORC). Carriers and drivers should become familiar with these publications to better understand their compliance requirements.

VEHICLE IDENTIFICATION

Regulations require motor vehicles used in commerce to be marked with certain information on both sides of the vehicle in letters that contrast sharply with the background and must be legible from a distance of 50 feet (while the vehicle is stationary).

Intrastate for-hire carriers operating vehicles with a gross vehicle weight rating (GVWR), gross combination weight rating (GCWR), gross vehicle weight (GVW), or gross combination weight (GCW) greater than 10,000 pounds must be marked with the following information:

- Company name; and either:
  - PUCO number issued by the Public Utilities Commission of Ohio preceded by 'PUCO'; or
  - Identification number issued by the Federal Motor Carrier safety administration preceded by 'USDOT'.

Interstate for-hire and private carriers operating vehicles with a GVWR, GCWR, GVW, or GCW over 10,000 pounds must be marked with the following information:

- Company name; and
- Identification number issued by the Federal Motor Carrier Safety Administration preceded by 'USDOT'.

ORC 4511.213 MOVE-OVER LAW

(A) The driver of a motor vehicle, upon approaching a stationary public safety, an emergency, or a road safety vehicle that is displaying a flashing red light, flashing combination red and white light, oscillating or rotating red light, oscillating or rotating combination red and white light, flashing blue light, flashing combination blue and white light, oscillating or rotating blue light, or oscillating or rotating combination blue and white light, shall do either of the following:

1) If the driver of the motor vehicle is traveling on a highway that consists of at least two lanes that carry traffic in the same direction of travel as that of the driver's motor vehicle, the driver shall proceed with due caution and, if possible and with due regard to the road, weather, and traffic conditions, shall change lanes into a lane that is not adjacent to that of the stationary public safety vehicle.
2) If the driver is not traveling on a highway of a type described in division (A)(1) of this section, or if the driver is traveling on a highway of that type but is not possible to change lanes or if to do so would be unsafe, the driver shall proceed with due caution, reduce the speed of the motor vehicle, and maintain a safe speed for the road, weather, and traffic conditions.

TRANSPORTATION OF PASSENGERS

Federal Motor Carrier Safety Regulations (FMCSR)

A driver may not transport any passenger on a commercial motor vehicle, except a bus, without written authorization from the carrier under whose authority the vehicle is being operated.

When authorization is issued, it shall state the name of the person to be transported, the points where the transportation is to begin and end, and the date upon which such authorization expires.

Authorization is not required for:

- Other employees assigned to the vehicle.
- Any person transported when aid is being rendered in case of an accident or other emergency.
- An attendant delegated to care for livestock.
- Vehicles controlled and operated by a farmer.

USING A COMMERCIAL MOTOR VEHICLE (CMV) FOR PURPOSES OTHER THAN THOSE DEFINED

FMCSR

Whenever a commercial motor vehicle of one type is used to perform the functions normally performed by a commercial motor vehicle of another type, the regulations apply to the vehicle and to its operation in the same manner as though the vehicle were actually a commercial motor vehicle of the latter type.

Example: If a bus is used to transport goods rather than passengers, then the regulations pertaining to the transportation of goods shall apply to that commercial motor vehicle.

Minimum Following Distances				
Miles Per Hour (MPH)	**Feet Per Second (FPS)**	**Estimated Driver Reaction Time Normal Conditions**	**Commercial Vehicle Driver Reaction and Brake Activation Time**	**Commercial Vehicle Driver** Distance required for driver to see object and then come to a complete stop.
SPEED	**(SPEED x 1.46)**	**(1.5 second) FEET**	**(1.8 second) FEET**	**FEET**
45	65.7	98.5	118.2	266.6
50	73	109.5	131.4	314.6
55	80.3	120.4	144.5	366.1
60	87.6	131.4	157.6	421.3
65	94.9	142.3	170.8	480.3
70	102.2	153.3	183.9	542.9

Average Full Size Vehicle Length: Car: 17.5 ft. Pick-up Truck: 17 ft. Tractor Trailer: 65 ft.
Recommended Following Distances:
Minimum of one (1) vehicle length for each 10 MPH.
Add 3/10th second to commercial driver's reaction times due to lag time in brake activation on commercial vehicles.

Motor Carrier Enforcement Unit

General Headquarters: Ohio State Highway Patrol
P.O. BOX 182074, Columbus, Ohio 43218-2074
Ph: (614) 466-3682 FAX: (614) 752-0243

District Headquarters and Platform Scale Facilities

All scale locations, *except Van Wert county*, equipped with *PrePass* electronic screening system.

DISTRICT	ADDRESS	TELEPHONE	SCALE FACILITY	HIGHWAY	MILE MARKER	LOCATION
FINDLAY	Ohio State Patrol 3201 N. Main St. Findlay, OH 45840	419-421-5340	Wood County Van Wert County Hancock County	IS 75 US 30 IS 75	8.86 NB 6.59 EB 20.35 SB	S of US 6 W of Van Wert N of Findlay
BUCYRUS	Ohio State Patrol 3665 SR 4 Bucyrus, OH 44820	419-562-6325	N/A			
WARREN	Ohio State Patrol 3424 US Route 422 Southington, OH 44470	330-898-7598	Medina County Ashtabula County Trumbull County	IS 76 IS 90 IS 80	5.4 WB 26.83 WB 6.88 WB	E of IS 71 Conneaut W SR 7
PIQUA	Ohio State Patrol 401 W. US 36 Piqua, OH 45356	937-773-1131	Preble County	IS 70	.81 EB	E of Indiana State Line
	Motor Carrier Enforcement location: Troy Facility 1275 Experiment Farm Rd. Troy, OH 45373	937-335-6517	N/A			
COLUMBUS	Ohio State Patrol 2855 W. Dublin-Granville Rd. Columbus, OH 43235	614-799-9241	N/A			
CAMBRIDGE	Ohio State Patrol 7051 Glenn Hwy. Rd. Cambridge, OH 43725	740-439-7578	Guernsey County	IS 70	3.11 WB	W of IS 77, Cambridge
WILMINGTON	Ohio State Patrol 950 Rombach Ave. Wilmington, OH 45177	937-655-9189	Hamilton County Clinton County	IS 74 IS 71	2.98 EB 6.84 NB	E of Indiana Line N of US 68
JACKSON	Ohio State Patrol 10179 Chillicothe Pike Jackson, OH 45640	740-288-1472	N/A			
	Motor Carrier Enforcement location: CDL Facility 25 McCarty Lane Jackson, OH 45640	740-286-9845	N/A			

Platform Scale Facility

OHIO REVISED CODE §4511.121 ENTERING PLATFORM SCALE FACILITY

Any operator of a commercial motor vehicle, upon approaching a scale location established for the purpose of determining the weight of the vehicle and its load, shall comply with any traffic control device or the order of a peace officer directing the vehicle to be weighed or otherwise inspected.

Any operator of a commercial motor vehicle that is equipped with an electronic clearance device authorized by the Superintendent of the Ohio State Highway Patrol under §4549.08.1 of the Ohio Revised Code may bypass a Platform Scale Facility when the in-cab electronic clearance device displays a green light or other affirmative visual or audible signal.

For the purposes of this section, "***Commercial Motor Vehicle***" means:

A vehicle or combination of vehicles used in interstate or intrastate commerce to transport property, and:

1. Has a gross vehicle weight rating (GVWR) or an actual gross vehicle weight of more than ten thousand pounds.

OR

2. Is transporting hazardous materials for which placarding is required pursuant to 49 C.F.R. Parts 100 to 180, regardless of the GVWR or actual weight.

NOTE:

A driver operating a CMV equipped with an "electronic pre-clearance device" may bypass the Platform Scale Facility, regardless of the instruction of the traffic control device (signs shown above), if the in-cab transponder displays a green light or other affirmative visual or audible signal. However, if a peace officer orders you to enter the Platform Scale Facility you must enter the Platform Scale Facility regardless of the traffic control device or the indication of the electronic pre-clearance device.

Telephone Numbers & Websites

STATE AGENCIES & DEPARTMENTS

Ohio Bureau of Motor Vehicles
Vehicle Information Services
(800) 589-8247
(614) 752-7800
WWW.BMV.OHIO.GOV

Ohio Department of Taxation
International Fuel Tax Agreement (IFTA)
Excise and Motor Fuel Tax Division
(855) 466-3921
WWW.TAX.OHIO.GOV

Ohio State Highway Patrol
(614) 466-2660
Motor Carrier Enforcement Unit
(614) 466-3682
STATEPATROL.OHIO.GOV

Public Utilities Commission of Ohio
Intrastate Authority, UCR and Hazmat Alliance Permit
(614) 466-3392
WWW.PUCO.OHIO.GOV

International Registration Plan
(614) 777-8400
(800) 477-0007
BMV.OHIO.GOV/VEHICLE_REGISTRATION/IRP_INFO.HTM

Ohio Department of Transportation
Special Hauling Permits
(614) 351-2300
WWW.DOT.STATE.OH.US/PERMITS

FEDERAL AGENCIES

Internal Revenue Service
Highway Users Tax
(800) 829-1040
WWW.IRS.GOV

Federal Motor Carrier Safety Administration
U.S. Department of Transportation
200 North High Street, Room 609
Columbus, Ohio 43215
(614) 280-5657
WWW.FMCSA.DOT.GOV
1. Diabetes Waiver Program (703) 448-3094
2. Vision Waiver Program (703) 448-3094
3. Skills Performance Evaluation Certificate Program (708) 283-3569

U.S. Department of Transportation
Safety Regulations Violations and Complaints
(888) 368-7238
NCCDB.FMCSA.DOT.GOV

U.S. Department of Labor
Occupational Safety & Health Administration
200 North High Street, Room 620
Columbus, Ohio 43215
(614) 469-5582
WWW.OSHA.GOV

TRADE ASSOCIATIONS

Ohio Trucking Association
Information, Books, and Forms
(614) 221-5375
(888) 382-1574
WWW.OHIOTRUCKINGASSN.ORG

Vehicle Registration & Motor Fuel Tax

VEHICLE REGISTRATION OHIO REVISED CODE §4503

GROSS VEHICLE WEIGHT (GVW)

Gross Vehicle Weight with regard to any commercial car, trailer, semitrailer, or bus that is taxed at the rates established under Ohio Revised Code §4503.042, means the unladen weight of the vehicle fully equipped plus the maximum weight of the load to be carried on the vehicle.

INTERNATIONAL REGISTRATION PLAN (IRP)

IRP is a program for licensing commercial vehicles which operate in interstate commerce. Carriers are issued a special "apportioned" license plate and cab card for each vehicle. The cab card lists the IRP jurisdictions the vehicle is licensed to enter and the elected weight for each state.

An apportionable vehicle, by definition, is a vehicle that a registrant intends to operate in two or more IRP jurisdictions for the transportation of property (or persons) for profit, and

1. is a power unit with a gross weight in excess of 26,000 pounds; or
2. is a power unit with three or more axles regardless of weight; or
3. is a power unit used in combination with another unit, and together exceeds 26,000 pounds.

IRP EXEMPTIONS

These vehicles do not need apportioned registration:

- Government-owned vehicles
- City pick-up and delivery vehicles
- Recreational vehicles
- Buses used to transport charter groups
- Vehicles displaying a restricted plate that is recognized under other reciprocity agreements

TEMPORARY REGISTRATION

Operators of out-of-state vehicles requiring IRP registration, but not registered in Ohio, can obtain temporary registration.

FOR COMPLETE VEHICLE REGISTRATION REQUIREMENTS, CONTACT:

Ohio Bureau of Motor Vehicles
(614) 752-7800 or (800) 589-8247
WWW.BMV.OHIO.GOV

INTERNATIONAL FUEL TAX AGREEMENT (INTERSTATE)

The International Fuel Tax Agreement (IFTA) requires you to have a fuel tax license if a motor vehicle is used, designed or maintained for the transportation of persons or property and:

1. Has 3 or more axles regardless of weight; or
2. Has 2 axles and a gross vehicle weight or registered weight exceeding 26,000 pounds; or
3. Is used in a combination of vehicles and the gross combination weight or registered combination weight exceeds 26,000 pounds.

FOR COMPLETE IFTA REQUIREMENTS, CONTACT:

Ohio Department of Taxation
(855) 466-3921
WWW.TAX.OHIO.GOV

Definitions

Some of the following definitions may be incomplete or rephrased - please refer to the actual rules for complete definitions.

BUS

Federal Motor Carrier Safety Regulations (FMCSR)

Any motor vehicle designed, constructed and/or used for the transportation of passengers, including taxicabs.

COMPENSATION

Compensation means any fee, monetary or otherwise, directly or indirectly charged for the transportation of passengers. Examples include, but are not limited to, the following types of operations: whitewater river rafters, hotel/motel shuttle transporters, rental car shuttle services, etc. These are examples of transportation for compensation because some fee is charged, usually indirectly in a total package charge or other assessment for the transportation performed.

COMMERCIAL MOTOR VEHICLE (CMV)

Any self-propelled or towed vehicle used on public highways in commerce to transport passengers or property and:

- Has either a ***gross vehicle weight rating*** or ***actual gross weight*** or ***gross combination weight rating*** or ***an actual gross combination weight*** of 10,001 or more pounds; or
- Is designed or used to transport more than eight passengers, including the driver; for compensation.
- Is designed for carrying 16 or more passengers, including the driver; and not used for compensation.
- The vehicle is used in the transportation of hazardous materials in a quantity that requires the vehicle to be placarded pursuant to 49 CFR, parts 100 to 180.

COMMERCIAL MOTOR VEHICLE DRIVER

FMCSR

Any person operating any commercial motor vehicle.

REGISTERED GROSS VEHICLE WEIGHT (RGVW)

Ohio Revised Code

The empty weight* of a vehicle or combination of vehicles fully equipped for service, plus the weight of the maximum load, which the owner has chosen to carry on such vehicle or combination of vehicles.

* Empty weight means the shipping weight of a vehicle as furnished by the manufacturer or a scale weight taken from a weight receipt furnished by the weighmaster operating scales approved and sealed by the State Department of Agriculture.

NOTE:

For commercial vehicles, empty weight shall also mean fully equipped for the use for which the vehicle is intended.

FARMER

FMCSR

Any person who operates a farm or is directly involved in the cultivation of land, crops or livestock, which are owned or directly controlled by that person.

FARM VEHICLE DRIVER

FMCSR

A person who drives only a motor vehicle that is:

- Controlled and operated by a farmer, farm family member, farm employee, as a private motor carrier of property, within 150 air miles of the farm, and transporting either agricultural products, farm machinery, or farm supplies to or from a farm; and
- Not being used in the operation of a for-hire motor carrier, and not carrying hazardous materials of a type or quantity that requires the vehicle to be placarded.

Definitions

Some of the following definitions may be incomplete or rephrased - please refer to the actual rules for complete definitions.

GROSS COMBINATION WEIGHT RATING (GCWR)

FMCSR

The Gross Vehicle Weight Rating (GVWR) of the power unit plus the Gross Vehicle Weight Rating (GVWR) of the vehicle(s) or trailer(s) being towed.

GROSS VEHICLE WEIGHT RATING (GVWR)

FMCSR

The value specified by the manufacturer as the loaded weight of a single vehicle.

NOTE:

The GVWR of a power unit is generally found on the federal sticker/manufacturer's specification sticker located near the driver door/seat; on trailers - on the left front.

Do not confuse Gross Vehicle Weight Rating with ***Registered*** *Gross Vehicle Weight.*

INTERSTATE COMMERCE

FMCSR

The transportation of persons or property, wherein, the transportation, either partial or total, results in movement across a state or international border.

INTRASTATE COMMERCE

FMCSR

The transportation of persons or property between points within the boundaries of a state and is not the beginning or continuation of interstate commerce.

MEDICAL EXAMINER'S CERTIFICATE (MEDICAL CARD)

FMCSR

A document issued by a medical examiner to a commercial motor vehicle driver certifying the driver is medically qualified under state and/or federal standards to operate a commercial motor vehicle.

NOTE:

The certificate, either the original or a copy, must be carried by the driver when operating a commercial motor vehicle, and the employer is required to keep either the original or a copy in the driver's qualification file.

PRIVATE MOTOR CARRIER OF PASSENGERS

FMCSR

Business: A private motor carrier engaged in the transportation of passengers, which is provided in the furtherance of a commercial enterprise and is not available to the public at large.

Nonbusiness: A private motor carrier involved in the transportation of passengers who does not otherwise meet the definition of a private motor carrier of passengers (business).

QUESTION:

What is considered a "public road?"

ANSWER:

A public road is any road under the jurisdiction of a public agency and open to public travel or any road on private property that is open to public travel.

Commercial Driver License (CDL)

SOURCE: OHIO REVISED CODE §4506.12

Who needs a CDL?

If you are going to operate ANY of the following vehicles while engaged in commerce either within the state or across state/foreign borders, you need a CDL. A CDL is a privilege that is added to an operator's license.

What type of CDL do I need?

An Ohio resident needs a CDL with the appropriate class designation to operate the following vehicles while engaged in commerce:

CLASS A

To operate a vehicle which:

- Is a combination of vehicles with a combined gross vehicle weight rating of 26,001 pounds or more, if the vehicle/trailer towed has a gross vehicle weight rating in excess of 10,000 pounds.

CLASS B

To operate a vehicle which:

- Is not a CLASS "A" vehicle.
- Is a single vehicle with a gross vehicle weight rating of 26,001 pounds, or more.
- May tow a vehicle/trailer which is not in excess of 10,000 pounds gross vehicle weight rating.

CLASS C

To operate a vehicle which:

- Is not a CLASS "A" or CLASS "B" vehicle.

AND

- Is a single vehicle, or combination of vehicles designed to transport 16 or more passengers, including the driver.

OR

- Is required to be placarded for hazardous materials.

OR

- Is a school bus with a gross vehicle weight rating of less than 26,001 pounds that is designed to transport fewer than 16 passengers including the driver.

What endorsements do I need on my CDL?

In addition to the appropriate CDL class designation, endorsements are required for the following:

T **DOUBLE** or **TRIPLE TRAILERS:** (Triple trailer combinations are not permitted in Ohio, except on the Ohio Turnpike.)

N **TANK VEHICLES:** Any commercial motor vehicle that is designed to transport any liquid and has a maximum capacity greater than one hundred nineteen gallons or is designed to transport gaseous materials and has a water capacity greater than one thousand pounds within a tank that is either permanently or temporarily attached to the vehicle or its chassis.
"Tank vehicle" does *not* include either of the following:

(1) Any portable tank having a rated capacity of less than 1,000 gallons;

OR

(2) Tanks used exclusively as fuel tank for the motor vehicle to which it is attached.

H **HAZARDOUS MATERIALS:** To carry hazardous materials in amounts requiring placarding (Includes small trucks, pickup trucks, and passenger vehicles).

X An "**X**" endorsement will appear on the license instead of the "**N**" and "**H**" codes when an applicant receives both the tanker and hazardous materials endorsements.

Commercial Driver License (CDL)

SOURCE: OHIO REVISED CODE

What endorsements do I need on my CDL?

P **PASSENGER:** Operate vehicles designed to transport 16 or more passengers, including the driver.
P1 Restriction: Operate Class A vehicles designed for fewer than 16 passengers, including the driver, and all lesser classes of vehicles without restriction as to the designed passenger capacity of the vehicle;
P2 Restriction: Operate Class A or B vehicles designed for fewer than sixteen passengers, including the driver, and all lesser classes of vehicles without restriction as to the designed passenger capacity of the vehicle;
P4 Restriction: Restricts driver to operating Class C school buses designed to transport fewer than 16 passengers including the driver;

S **SCHOOL BUS:** Drivers, who wish to drive a school bus, must add a school bus endorsement to their CDL. They must pass a special knowledge examination on safety considerations when transporting passengers in a school bus and must pass skills tests in a school bus. This endorsement applies to applicants who wish to drive a school bus in any class (A, B, or C).

RESTRICTIONS

K1 **Intrastate Only:** Restricts commercial drivers under age 21 to driving commercial vehicles hauling loads that originate and conclude within the boundaries of a single state.

K2 **Intrastate Vision:** Restricts commercial drivers unable to achieve Federal 391 standards to driving commercial vehicles hauling loads that originate and conclude within the boundaries of a single state.

K3 **Intrastate Medical:** Restricts commercial drivers unable to achieve Federal 391 standards to driving commercial vehicles hauling loads that originate and conclude within the boundaries of a single state.

L **AIR BRAKE RESTRICTION:** May not operate a vehicle equipped with air brakes. If the vehicle is equipped with air brakes, you will need to take the skills and knowledge parts of the CDL test that refer to air brakes. No actual endorsement is added to the license; however, if you do not pass the air brake portion of the test, an "L" restriction will be placed your license.

What CDL License is required?

SOURCE: OHIO REVISED CODE

There are three classes of Commercial Driver Licenses: CLASS "A", CLASS "B", and CLASS "C".
To see if a Commercial Driver License is required, follow the instructions and answer the questions below:

1. Read the first question. Choose the appropriate answer (YES or NO).
2. Follow the arrow from the selected YES or NO answer to the next box.
3. Read the question and choose the appropriate answer (YES or NO).
4. Continue this process until you reach the box stating the required CDL class.

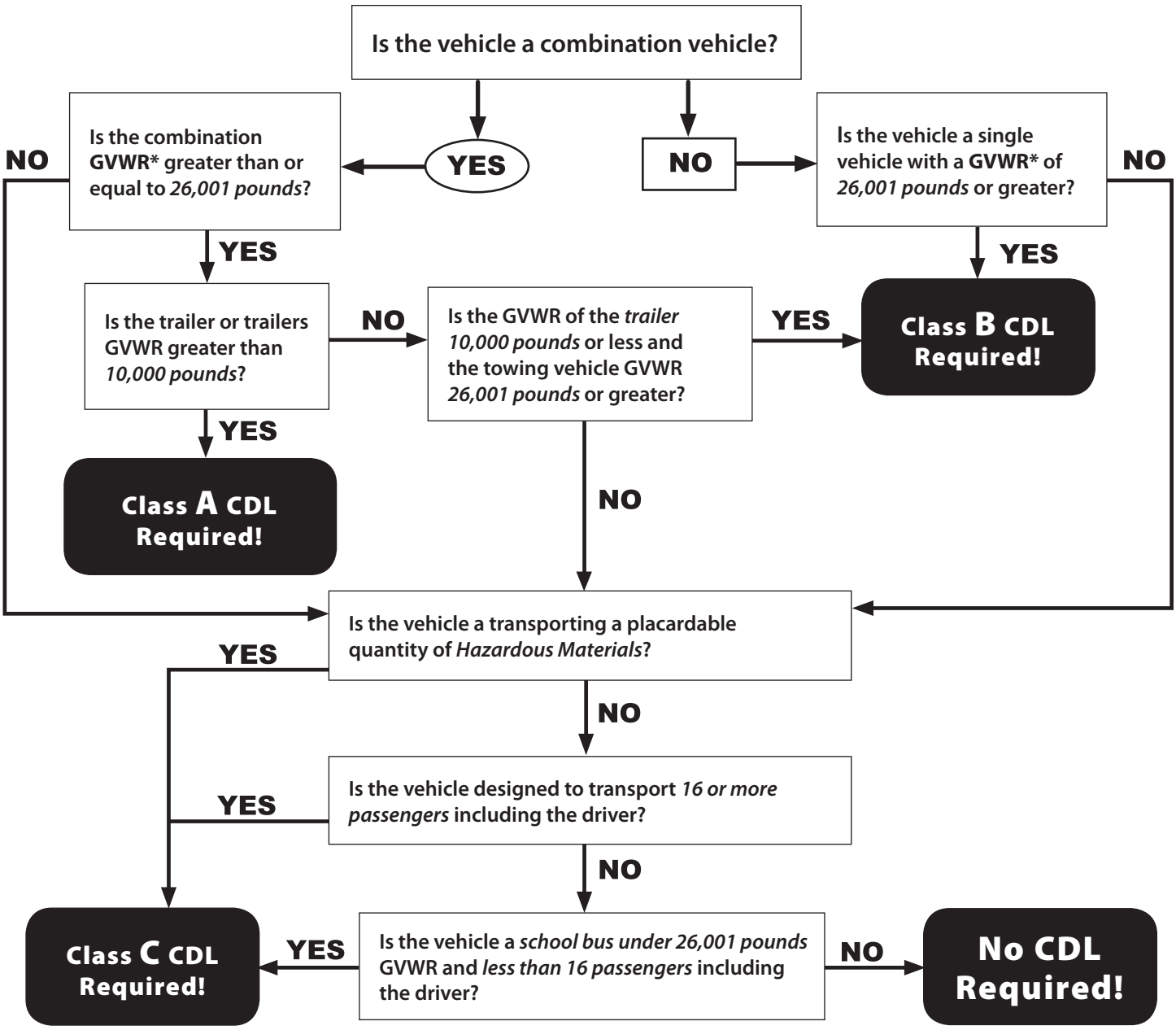

***GVWR** – *Gross Vehicle Weight Rating (GVWR)* means the value specified by the manufacturer as the maximum loaded weight of a single or a combination vehicle.
The Gross Vehicle Weight Rating of a combination vehicle is the Gross Vehicle Weight rating of the power unit plus the Gross Vehicle Weight Rating of each towed unit. (*revised 6-18-02*)

Driver's Hours of Service

SOURCE: FEDERAL MOTOR CARRIER SAFETY REGULATIONS

*The following regulations apply to **property-carrying** commercial motor vehicles.*
Federal and state safety regulations limit a driver to the number of hours he/she can work. This means, once a driver has worked a prescribed number of hours, he/she is no longer eligible to drive until he/she has met the off duty requirements established in the regulations. Accurate time records for each driver must be maintained at the employer's principal place of business for a period of at least six (6) months and employers must ensure that driver compliance is met.

DUTY STATUS

Driving means all time spent at the driving controls of a commercial motor vehicle in operation.

On duty time means all time from the time a driver begins to work or is required to be in readiness for work until the time the driver is relieved from all responsibilities for performing work.

On duty time includes (but not limited to):

1. All driving time as defined in the term driving time;
2. All time inspecting or servicing any CMV at any time;
3. All time loading or unloading a CMV;
4. All time repairing, obtaining assistance, or remaining in attendance upon a disabled CMV;
5. All time in or on a CMV, other than:
   a. Time spent resting in or on a parked vehicle;
   b. Time spent resting in a sleeper berth; or
   c. Up to 2 hours riding in the passenger seat of a property-carrying CMV moving on the highway immediately before or after a period of at least 8 consecutive hours in the sleeper berth;
6. All time spent traveling to, from and during the course of providing breath and/or alcohol specimens for drug and alcohol tests required under federal regulations;
7. Performing any other work for a motor carrier; and
8. Performing any compensated work for a person who is not a motor carrier.

Off duty means when the driver has been relieved of all responsibility for performing work by the employer and is not performing any other compensated work.

Sleeper berth means a sleeping compartment conforming with *Federal Motor Carrier Safety Regulations*.

MAXIMUM DRIVING & ON DUTY RULES

- A motor carrier shall not permit or require a driver to drive, nor shall any such driver drive, a property-carrying CMV for more than 11 cumulative hours following 10 consecutive hours off duty and must have 10 consecutive hours off duty before he/she is eligible to drive again.
- A motor carrier shall not permit or require a driver to drive, nor shall any such driver drive, a property-carrying CMV after the 14th hour after coming on duty following 10 consecutive hours off duty and must have 10 consecutive hours off duty before he/she is eligible to drive again.
- Rest breaks. Driving a property-carrying CMV is not permitted if more than 8 hours have passed since the end of the driver's last off-duty or sleeper-berth period of at least 30 minutes.
- No motor carrier shall not permit or require a driver to drive, nor shall any such driver drive, a property-carrying CMV for any period after having been on duty 60 hours in any period of 7 consecutive days or having been on duty 70 hours in any period of 8 consecutive days (only motor carrier operating CMVs 7 days a week may use the 70 hour rule).
  - 34 Hour Off-Duty Periods
    - Any period of 7 or 8 consecutive days may end with the beginning of an off-duty period of 34 or more consecutive hours that includes two periods from 1 a.m. to 5 a.m.

SOURCE: FEDERAL MOTOR CARRIER SAFETY REGULATIONS

*The following regulations apply to **property-carrying** commercial motor vehicles.*

- A driver may not take another 34 off-duty period to restart the calculation of 60 hours in 7 consecutive days or 70 hours in 8 consecutive days until 168 or more consecutive hours have passed since the beginning of the last such off-duty period. When a driver takes more than one off-duty period of 34 or more consecutive hours within a period of 168 consecutive hours, he or she must indicate in the Remarks section of the record of duty status which such off-duty period is being used to restart the calculation of 60 hours in 7 consecutive days or 70 hours in 8 consecutive days.

LOGBOOK REQUIREMENTS

- The daily log is an accurate and complete record of a driver's activities for each 24 hour period.
  - An automatic on-board recording device meeting the requirements of FMCSR §395.15 may be used in lieu of handwritten, paper logbooks.
- A driver may use a computer to generate the graph grid and entries for the record of duty status or logbook, provided the computer-generated output includes the minimum information required by §395.8 and is formatted in accordance with the rules. In addition, the driver must be capable of printing the record of duty status for the current 24-hour period at the request of an enforcement officer. The driver must print the record of duty status at the end of each 24-hour period, sign it to certify that all entries required by this section are true and correct, and maintain a copy of printed and signed records of duty status for the previous 7 consecutive days and make it available for inspection at the request of an enforcement officer.
- Unless exempt, (see "Logbook Exemptions for property-carrying CMVs") all drivers must record their duty status using the daily logbook.
- All entries in the logbook shall be accurate, current, legible and in the driver's own handwriting.
- Employers must retain the daily logs at their principal place of business (previous 6 months).
- Employers must maintain supporting documents to verify the logs are true and accurate.

LOGBOOK EXEMPTIONS FOR PROPERTY-CARRYING CMVS

Some drivers are excluded by state and federal regulations from having to complete the daily logbook, provided they meet certain requirements.

Short Haul Operations

100 air-mile radius driver. A driver is exempt from the requirements of having to complete a daily logbook if:

1. The driver operates within a 100 air-mile radius of the normal work reporting location;
2. The driver returns to the work reporting location and is released from work within 12 consecutive hours;
3. The driver has at least 10 consecutive hours off duty separating each 12 hours on duty;
4. The driver does not exceed 11 hours maximum driving time following 10 consecutive hours off duty; and
5. The motor carrier that employs the driver must maintain and retain accurate time records for a period of 6 months showing the date, the driver's name, the time the driver reports for duty each day, the time the driver is released from duty each day, and total hours on duty each day.

Driver's Hours of Service

SOURCE: FEDERAL MOTOR CARRIER SAFETY REGULATIONS

*The following regulations apply to **property-carrying** commercial motor vehicles.*

DRIVERS OF PROPERTY-CARRYING CMVS NOT REQUIRING A COMMERCIAL DRIVER LICENSE FOR OPERATION

Except as provided, a driver is exempt from the requirements of the 11 hour, 14 hour, and 60/70 hour rules and the requirements for having to keep a daily logbook if:

1. **The driver operates a property-carrying CMV for which a Commercial Driver License is not required;**
2. **The driver operates within a 150 air-mile radius of his or her normal work reporting location;**
3. **The driver returns to the normal work reporting location at the end of each duty tour;**
4. **The driver has at least 10 consecutive hours off duty separating each on duty period;**
5. **The driver does not drive more than 11 hours following at least 10 consecutive hours off duty;**
6. **The driver does not drive after the 14th hour after coming on duty on 5 days of any period of 7 consecutive days; and after the 16th hour after coming on duty on 2 days of any period of 7 consecutive days;**
7. **The driver does not drive after having been on duty for 60 hours in 7 consecutive days (if the employing motor carrier does not operate CMVs every day of the week) or after having been on duty for 70 hours in 8 consecutive days (if the employing motor carrier operates CMVs every day of the week);**
8. **Any period of 7 or 8 consecutive days may end with the beginning of any off duty period of 34 or more consecutive hours.**
9. **The motor carrier that employs the driver must maintain and retain accurate time records for a period of 6 months showing the date, the driver's name, the time the driver reports for duty each day, the time the driver is released from duty each day, and total hours on duty each day.**

Note:

A driver normally meeting either short haul requirements listed above, but on occasion does not, must complete a daily logbook on the days he/she is unable to meet the short haul requirements. The driver would not need the previous 7 days of logs in this situation.

QUESTION: *What are supporting documents?*

ANSWER: Supporting documents are motor carrier records which are maintained in the ordinary course of business and used to verify information recorded in the driver's daily log. Supporting documents include, but are not limited to: bills of lading, freight bills, dispatch records, driver call-in records, weight/scale tickets, fuel receipts, toll receipts, crash reports, telephone billing statements, roadside inspection reports, credit card receipts, on-board computer reports, trip permits, traffic citations and/or other documents.

QUESTION: *May a driver who meets the 100 air-mile exemption for the daily logbook be off duty during the course of the workday?*

ANSWER: Yes, provided the driver meets all the requirements for being off duty. If off duty time is taken, the employer's time record must indicate both the time a driver spends on duty and time a driver is off duty. Even though a driver is able to take time off duty, he/she must still return and be released from duty within 12 consecutive hours.

SOURCE: FEDERAL MOTOR CARRIER SAFETY REGULATIONS

The following regulations apply to property-carrying commercial motor vehicles.

***QUESTION:** What conditions must be met for a commercial motor vehicle driver to be off duty for meals and other routine stops during a tour of duty?*

ANSWER:

1. The driver must have been relieved of all duty and responsibility by the employer for the vehicle and custody of all equipment, cargo or passengers;
2. The duration of the driver's relief from duty must be for a finite period of time;
3. During the duration of off duty time, the driver must be at liberty to pursue the activities of his/her own choosing and to leave the premises where the vehicle is situated; and
4. If the driver is relieved from duty, the employer must have made the duration of the relief known to the driver (in written instructions) prior to the driver's departure.

If all of these conditions can be met, a driver may be considered off duty during a tour of duty.

NOTE:

Being relieved of duty for a period of less than 10 consecutive hours does not extend the driver's work day beyond the 14 hour limit described previously.

***QUESTION:** How must driving time be recorded when a driver uses a commercial motor vehicle for personal reasons?*

ANSWER: When a driver is relieved from work and all responsibility for performing work, the time spent traveling between home and the normal work reporting location may be considered off duty.

Similarly, time spent traveling short distances from an en route lodging (terminal, motel, etc.) to restaurants may also be considered off duty, provided the vehicle is not laden.

A laden CMV may not be used as a personal vehicle. A driver using a CMV for transportation home, and who is later dispatched from home, would be on duty from the time he/she leaves home. A driver placed out of service for exceeding the requirements of the hours of service regulations may not drive a CMV to any location to obtain rest.

Driver's Hours of Service

SOURCE: FEDERAL MOTOR CARRIER SAFETY REGULATIONS

*The following regulations apply to **passenger-carrying** commercial motor vehicles.*
Federal and state safety regulations limit a driver to the number of hours he/she can work. This means, once a driver has worked a prescribed number of hours, he/she is no longer eligible to drive until he/she has met the off duty requirements established in the regulations. Accurate time records (for each driver must be maintained at the employer's principal place of business for a period of at least six (6) months and employers must ensure that driver compliance is met.

DUTY STATUS

Driving means all time spent at the driving controls of a commercial motor vehicle in operation.

On duty time means all time from the time a driver begins to work or is required to be in readiness for work until relieved from all responsibilities for performing work.

On duty time includes (but is not limited to):

1. All driving time as defined in the term driving time;
2. All time inspecting or servicing any CMV at any time;
3. All time loading or unloading a CMV;
4. All time repairing, obtaining assistance, or remaining in attendance upon a disabled CMV;
5. All time in or on a CMV, other than:
   a. Time spent resting in or on a parked vehicle;
   b. Time spent resting in a sleeper berth; or
   c. Up to 2 hours riding in the passenger seat of a property-carrying CMV moving on the highway immediately before or after a period of at least 8 consecutive hours in the sleeper berth;
6. All time spent traveling to, from and during the course of providing breath and/or alcohol specimens for drug and alcohol tests required under federal regulations;
7. Performing any other work for a motor carrier; and
8. Performing any compensated work for a person who is not a motor carrier.

Off duty means when the driver has been relieved of all responsibility for performing work by the employer and is not performing any other compensated work.

Sleeper berth means a sleeping compartment conforming with *Federal Motor Carrier Safety Regulations.*

MAXIMUM DRIVING & ON DUTY RULES

- A driver shall not drive a passenger-carrying CMV more than 10 hours following 8 consecutive hours off duty and must have 8 consecutive hours off duty before he/she is eligible to drive again.
- A driver shall not drive a passenger-carrying CMV for any period after having been on duty 15 hours following 8 consecutive hours off duty and must have 8 consecutive hours off duty before he/she is eligible to drive again.
- A driver shall not drive a passenger-carrying CMV after having been on duty 60 hours in any 7 consecutive days or 70 hours in any 8 consecutive days (only carriers operating passenger-carrying 7 days a week may use the 70 hour rule).

LOGBOOK REQUIREMENTS

- The daily log is an accurate and complete record of a driver's activities for each 24 hour period.
- Unless exempt, (see exemptions, next page) all drivers must record their duty status using the daily logbook.
- All entries in the logbook shall be accurate, legible and in the driver's own handwriting.
- Employers must retain the daily logs at their principal place of business (previous 6 months).
- Employers must maintain supporting documents to verify the logs are true and accurate.

SOURCE: FEDERAL MOTOR CARRIER SAFETY REGULATIONS

*The following regulations apply to **passenger-carrying** commercial motor vehicles.*

***QUESTION:** What are supporting documents?*

ANSWER: Supporting documents are motor carrier records which are maintained in the ordinary course of business and used to verify information recorded in the driver's daily log. Supporting documents include, but are not limited to: bills of lading, freight bills, dispatch records, driver call-in records, weight/scale tickets, fuel receipts, toll receipts, accident reports, telephone billing statement, roadside inspection reports, credit card receipts, on-board computer reports, trip permits, traffic citations and/or other documents.

LOGBOOK EXEMPTIONS FOR PASSENGER-CARRYING CMVS

Some drivers are excluded under state and federal regulations from having to complete the daily logbook, provided they meet certain requirements.

100 air-mile radius driver. A driver is exempt from maintaining a daily logbook when:

1. Operating within a 100 air-mile radius of their normal work reporting locations, and
2. Leave and return to the work reporting location and be released from duty within 12 consecutive hours, and
3. Obtain at least 8 consecutive hours off duty between each 12 consecutive hours on duty, and
4. Not drive more than 10 hours during any 12 consecutive hours on duty.

Note:

A driver normally meeting the requirements listed above, but on occasion does not, must complete a daily logbook on the days he/she is unable to meet the requirements. The driver would not need the previous 7 days' logs in this situation.

Employers must retain accurate and true time records (time card/time sheet) for each driver meeting this exemption. The employer must always have the previous 6 months' records on file. These records must indicate:

- Driver's name;
- Time the driver reports for duty each day;
- Time the driver is release from duty each day; and
- Total on duty hours each day.

Note:

Although some drivers may not need to complete the logbook, they must still comply with the 60 to 70 hour rule and the 10 hour driving rule.

***QUESTION:** May a driver who meets the 100 air-mile exemption for the daily logbook be off duty during the course of the workday?*

ANSWER: Yes, provided the driver meets all the requirements for being off duty. If off duty time is taken, the employer's time record must indicate both the time a driver spends on duty and time a driver is off duty. Even though a driver is able to take time off duty, he/she must still return and be released from duty within 12 consecutive hours.

Driver's Hours of Service

SOURCE: FEDERAL MOTOR CARRIER SAFETY REGULATIONS

The following regulations apply to passenger-carrying commercial motor vehicles.

QUESTION: ***What conditions must be met for a commercial motor vehicle driver to be off duty for meals and other routine stops during a tour of duty?***

ANSWER:

1. The driver must have been relieved of all duty and responsibility by the employer for the vehicle and custody of all equipment, cargo or passengers.
2. The duration of the driver's relief from duty must be for a finite period of time, which is of sufficient duration which will ensure a reduction in driver fatigue.
3. During the duration of off duty time, the driver must be at liberty to pursue the activities of his/her own choosing and to leave the premises where the vehicle is situated.
4. If the driver is relieved from duty, the employer must have made the duration of the relief known to the driver (in written instructions) prior to the driver's departure.

If all of these conditions can be met, a driver may be considered off duty during a tour of duty.

QUESTION: ***How must driving time be recorded when a driver uses a commercial motor vehicle for personal reasons?***

ANSWER: When a driver is relieved from work and all responsibility for performing work, the time spent traveling between home and the normal work reporting location may be considered off duty. Similarly, time spent traveling short distances from an en route lodging (terminal, motel, etc.) to restaurants may also be considered off duty, provided the vehicle is not laden.

A laden CMV may not be used as a personal vehicle. A driver using a CMV for transportation home, and who is later dispatched from home, would be on duty from the time he/she leaves home.

A driver placed out of service for exceeding the requirements of the hours of service regulations may not drive a CMV to any location to obtain rest.

Inspection, Repair & Maintenance

SOURCE: FEDERAL MOTOR CARRIER SAFETY REGULATIONS

GENERAL REQUIREMENTS

- Motor carriers shall systematically and routinely inspect, repair and maintain all Commercial Motor Vehicles (CMV) subject to their control. (This includes towed units.)
- All vehicle parts and accessories which may affect safety must be in safe working condition at all times.
- Push-out windows, emergency doors and emergency door marking lights in buses must be inspected at least every 90 days.
- Drivers are required to inspect all CMV's they operate daily (pre-trip and post-trip).
- Carriers must ensure all CMV's pass an annual inspection performed by a certified inspector.
- Carriers must maintain a maintenance file for all CMV's under the carrier's control. The file shall contain all records of inspection, repair and maintenance in accordance with the requirements set forth in the *Federal Motor Carrier Safety Regulations*.

PRE-TRIP INSPECTION

Before driving a CMV, a driver must:

- Be satisfied the vehicle is in safe operating condition.
- Review and sign the last post-trip inspection report.

POST-TRIP INSPECTION

- Every driver must perform and document a vehicle inspection at the end of each day that a vehicle is operated.
- The inspection report must identify the CMV and list any defect which affects the safe operation of the vehicle.
- A copy of the report must be maintained in the vehicle's maintenance file.

Carriers should have a written maintenance schedule for each CMV outlining routine vehicle maintenance and the due dates for each type of maintenance.

SOURCE: FEDERAL MOTOR CARRIER SAFETY REGULATIONS

MINIMUM INSPECTION REQUIREMENTS

As a minimum, the post-trip inspection shall include the following parts and accessories:

- Service brakes; including trailer brake connections.
- Parking (hand) brake
- Steering mechanism
- Lighting devices and reflectors
- Tires
- Horn
- Windshield wipers
- Rear vision mirrors
- Coupling devices
- Wheels and rims
- Emergency equipment

Carriers should require these same items (company policy) as minimums for the pre-trip inspection.

ANNUAL INSPECTION

The annual or periodic inspection must be performed at least every 12 months. The inspection must be performed by a qualified inspector who is familiar with the procedures and tools necessary to perform the inspection. Proof of the inspection must be carried on the vehicle and a copy maintained in the vehicle maintenance file.

The requirements for the annual inspection may be met by:

- Passing a CVSA level-1 roadside inspection.
- Contracting with a qualified commercial garage.
- Self inspection performed by a qualified employee of the carrier.
  - If the annual inspection is performed by the carrier or contracted to a commercial garage, the carrier must ensure that the person performing the inspection meets the minimum inspector requirements established in the *Federal Motor Carrier Safety Regulations* for performing annual inspections and braked inspections.
  - The inspector's qualifications must be documented and maintained at the carrier's place of business.

Refer to the complete text of the Federal Motor Carrier Safety Regulations in order to meet compliance requirements.

Safety Devices

SOURCE: FEDERAL MOTOR CARRIER SAFETY REGULATIONS

The FMCSR require the use of safety devices on towed vehicles which, when properly connected to the towed and towing vehicles and coupling devices, prevent the coupling devices from dropping to the ground in the event it fails or becomes disconnected.

If the safety devices are too long and the coupling device fails or disconnects, the tow bar would be able to make contact with the ground (figure 1), causing the towed vehicle to totally disconnect from the towing vehicle.

figure 1

CROSSING SAFETY DEVICES

- The design of the towed vehicle and/or the type of coupling devices used will determine whether the vehicle combinations require one or two safety devices (see FMCSR for details).
- When two safety devices are required, it may be necessary to cross the safety devices.

Note:

Crossing of safety devices is always required in a driveway-towaway operation.

- Should the coupling device become detached during travel, crossed safety devices (figure 2) will minimize the lateral movement of the towed vehicle as illustrated in figure 3 where the safety devices are not crossed.

Note:

Refer to the FMCSR for complete details concerning the proper use of safety devices.

figure 2

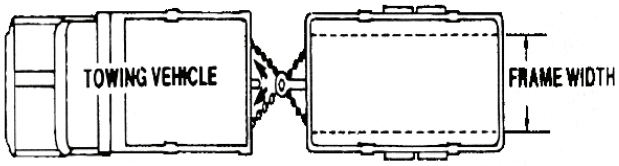

figure 3

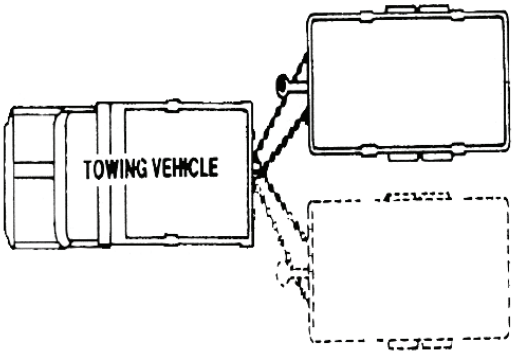

QUESTION: *When towing a trailer, are safety chains the only type of safety devices which may be used to prevent the tow-bar from contacting the road during a tow-bar failure or disconnect?*

ANSWER: No. Safety chains, cables or any device, which meets or exceeds the strength, security of attachment and directional stability of safety chains or cables, may be used.

Brakes

SOURCE: FEDERAL MOTOR CARRIER SAFETY REGULATIONS

GENERAL REQUIREMENTS

All commercial motor vehicles (including trailers) must be equipped with brakes acting on all wheels. These brakes must be capable of operating at all times.

EXCEPTIONS

- Any full trailer, any semitrailer or any pole trailer having a gross vehicle weight (GVW) of 3,000 pounds or less does not have to have brakes if the axle weight of the towed vehicle does not exceed 40% of the sum of the axle weights of the towing vehicle.
- Disabled vehicles being towed.

Full trailer means any motor vehicle other than a pole trailer which is designed to be drawn by another motor vehicle and so constructed that no part of its weight, except for the towing device, rests upon the self-propelled towing motor vehicle. A semitrailer equipped with an auxiliary front axle (converter dolly) shall be considered a full trailer.

Pole trailer means any motor vehicle which is designed to be drawn by another motor vehicle and attached to the towing motor vehicle by means of a "reach" or "pole" or by being "boomed" or otherwise secured to the towing motor vehicle, for transporting long or irregularly shaped loads such as poles, pipes, or structural members, which generally are capable of sustaining themselves as beams between the supporting connections.

Semitrailer means any motor vehicle, other than a pole trailer, which is designed to be drawn by another motor vehicle and is constructed so that some part of its weight rests upon the self-propelled towing motor vehicle.

Note:

There are some exceptions for vehicles in a driveway-tow-away operation. Complete details of all exemptions can be found in the Federal Motor Carrier Safety Regulations.

OHIO REVISED CODE §4513.20

BRAKE EQUIPMENT:

(4) When operated upon the highways of this state, the following vehicles shall be equipped with brakes adequate to control the movement of and to stop and to hold the vehicle, designed to be applied by the driver of the towing motor vehicle from its cab, and also designed and connected so that, in case of a breakaway of the towed vehicle, the brakes shall be automatically applied:

(a) Every trailer or semitrailer, except a pole trailer, with an empty weight of 2,000 pounds or more, manufactured or assembled on or after January 1, 1942;

(b) Every manufactured home or travel trailer with an empty weight of 2,000 pounds or more, manufactured or assembled on or after January 1, 2001.

QUESTION: *The regulations state that a trailer having a GVW of 3,000 pounds or less must be equipped with brakes if the axle weight of the towed vehicle exceeds 40% of the sum of the axle weights of the towing vehicle. Is the manufacturer of the trailer responsible for ensuring the trailer is equipped with brakes when required?*

ANSWER: The motor carrier pulling the trailer is responsible for ensuring that the trailer is in compliance.

QUESTION: *Are unladen converter dollies covered by the brake exception?*

ANSWER: Yes. However, if the converter dolly is laden, the brakes must be operable.

QUESTION: *Do lift axles have to be equipped with brakes?*

ANSWER: Yes, when the wheels are in contact with the roadway.

Brakes

SOURCE: FEDERAL MOTOR CARRIER SAFETY REGULATIONS

BREAKAWAY AND EMERGENCY BRAKING

Every commercial motor vehicle, if used to tow a trailer that is equipped with brakes, shall be equipped with means for providing that in the case of a breakaway of the trailer, the service brakes on the towing vehicle will be capable of stopping the towing vehicle.

Every trailer required to be equipped with brakes shall have brakes which apply automatically and immediately upon breakaway from a towing vehicle. The brakes must remain in the applied position for at least 15 minutes.

WARNING DEVICES AND GAUGES

In general, a bus, truck or truck tractor must be equipped with a signal that provides a warning to a driver when a failure occurs in the vehicle's service brake system.

- A vehicle equipped with hydraulic brakes and manufactured after July 1, 1973, is required to have a visual warning that indicate brake system failure when the brakes are applied.
- Any vehicle equipped with air brakes or a vehicle that tows a vehicle equipped with air brakes must have a continuous visual warning device that alerts a driver when the air pressure in the brake system is low. The vehicle must also have an air pressure gauge.
- Any vehicle equipped with vacuum brakes or a vehicle that tows a vehicle equipped with vacuum brakes must have a continuous audible or visual warning device that alerts a driver when the vacuum supply reservoir is low. The vehicle must also have a vacuum gauge.
- A vehicle having an air or vacuum assisted hydraulic system must be equipped with warning signals and devices that meet all of the above requirements.

Note:

Consult the Federal Motor Carrier Safety Regulations for complete details concerning warning devices and gauges.

AUTOMATIC BRAKE ADJUSTERS (SELF-ADJUSTING SLACK ADJUSTERS)

Each CMV manufactured on or after October 20, 1993, and equipped with a *hydraulic brake system*, shall meet the automatic brake adjustment system requirements of Federal Motor Safety Standard No. 105 (49 CFR 571.105, S5.1). This regulation requires the vehicle's service brakes to have a system of automatic adjustment to compensate for wear in the service brakes.

Each CMV manufactured on or after October 20, 1994, and equipped with an *air brake system*, shall meet the automatic brake adjustment system requirements of Federal Motor Vehicle Safety Standard No. 121 (49 CFR 571.121, S51.8). This regulation requires the vehicle's service brakes to have a system of automatic adjustment to compensate for wear in the service brakes.

Modification of an automatic brake adjustment system that removes the automatic adjustment feature (i.e., replacing self-adjusting slack adjusters with manual slack adjusters) is prohibited.

! ADVISORY !

Self-adjusting slack adjuster manufacturers, the American Trucking Association's Truck Maintenance Council, and the Commercial Vehicle Safety Alliance recommend manually adjusting self-adjusting slack adjusters ONLY at initial installation or when worn brake components (i.e., brake linings, brake drums, etc.) are replaced.

Routine manual adjustment of self-adjusting slack adjusters may cause damage to the self-adjusting slack adjuster and may conceal more serious problems in the foundation brake system.

Manufacturer's recommended practices for maintaining automatic brake adjustment systems should be closely followed.

Load Securement

SOURCE: FEDERAL MOTOR CARRIER SAFETY REGULATIONS

A person shall not drive or move a commercial motor vehicle on a highway unless the CMV is so constructed or loaded as to prevent its contents from dropping, sifting, leaking, blowing off or otherwise escaping from the vehicle. This would include the use of chains, binders, tie downs and other approved securement devices to ensure the load is secure.
Cargo must be contained, immobilized, or secured to prevent shifting upon or within the vehicle to such an extent that the vehicle's stability or maneuverability is adversely affected.

GENERAL LOAD SECUREMENT

The general and cargo specific rules for load securement are found in the Federal Motor Carrier Safety Regulations.

- **Cargo must be firmly immobilized and secured on or within a vehicle by structures of adequate strength, dunnage or dunnage bags, shoring bars, tiedowns or a combination of these.**
- **Articles of cargo that are likely to roll must be restrained by chocks, wedges, a cradle or other equivalent means to prevent rolling.**
- **Articles of cargo placed beside each other and secured by transverse (from left side to the right side) tiedowns must be loaded in direct contact with each other or prevented from shifting towards each other.**
- **All vehicle structures, systems, parts, and components used to secure cargo must be in proper working order when used to perform that function with no damaged or weakened components.**
- **Each tiedown, or its associated connectors, or its attachment mechanisms must be designed, constructed, and maintained so the driver of an in-transit CMV can tighten them.**
- **When articles of cargo are in contact with the front end structure (headerboards, bulkheads, other cargo, or other appropriate blocking devices), the front end structure must:**
  - **Extend above the floor of the vehicle to a height of 4 feet or to a height at which it blocks forward movement of the cargo, whichever is lower;**
  - **Have a width which is at least equal to the width of the vehicle or which blocks forward movement of the cargo, whichever is narrower; and**
  - **Must be designed, constructed, and maintained so that it is capable of resisting penetration by any article of cargo that contacts it and must not have any opening large enough to permit any article of cargo to pass through it.**

Consult *Federal Motor Carrier Safety Regulations* for specific compliance requirements for load securement.

Load Securement

SOURCE: FEDERAL MOTOR CARRIER SAFETY REGULATIONS

WORKING LOAD LIMITS

Working Load Limits are established in the FMCSR for load securement devices such as chains, webbing, rope, cord and strapping when they have not been marked by the manufacturer. Working load limits are listed in charts in the FMCSR.

- Tiedown assemblies must be of adequate number and working load limit strength to prevent a load from shifting or falling.
- The aggregate (total) working load limit of the tiedown assemblies used to secure an article against movement, in any direction, must be at least ½ times the weight of the article.
- The aggregate working load limit is the sum of:
  - One-half the working load limit of each tiedown that goes from an anchor point on the vehicle to an anchor point on an article of cargo;
  - One-half the working load limit of each tiedown that is attached to an anchor point on the vehicle, passes through, over, or around the article of cargo, and is then attached to an anchor point on the same side of the vehicle.
  - The working load limit for each tiedown that goes from an anchor point on the vehicle, through, over, or around the article of cargo, and then attaches to another anchor point on the other side of the vehicle.
- If an article of cargo is not blocked or positioned to prevent movement in the forward direction by a headerboard, bulkhead, other cargo, or other appropriate blocking devices, it must be secured by at least:
  - One approved tiedown for articles 5 feet or less in length, and 1,100 pounds or less in weight.
  - Two approved tiedowns if the article is:
    - 5 feet or less in length and more than 1,100 pounds in weight; or
    - Longer than 5 feet but less than or equal to 10 feet in length (no matter the weight of the article).
  - If the article is longer than 10 feet in length:
    - Two tiedowns for the first 10 feet of length; and
    - One additional tiedown for each 10 feet of article length, or fraction thereof, beyond the first 10 feet of length.
- If an article of cargo is blocked or positioned to prevent movement in the forward direction by a headerboard, bulkhead, other cargo, or other appropriate blocking devices it must be secured by at least one tiedown for every 10 feet of article length, or fraction thereof.

SPECIFIC SECUREMENT REQUIREMENTS BY COMMODITY TYPE

In addition to the general securement requirements listed above, the Federal Motor Carrier Safety Regulations contain specific securement requirements for the following types of articles of cargo:

1. Logs
2. Dressed lumber or similar building products
3. Metal coils
4. Paper rolls
5. Concrete pipe
6. Intermodal containers
7. Automobiles, light trucks and vans
8. Flattened or crushed vehicles
9. Roll-on/roll-off or hook lift containers
10. Large boulders.

Note:

Please refer to the Federal Motor Carrier Safety Regulations for the specific requirements for each of these types of articles of cargo.

Wheel Protectors

SOURCE: OHIO REVISED CODE §5577.11 WHEEL PROTECTORS

No person shall drive or operate, or cause to be driven or operated, any commercial car, trailer, or semi-trailer, used for the transportation of goods or property, the gross weight of which, with load, exceeds three tons, upon the public highways, streets, bridges, and culverts within this state, unless such vehicle is equipped with suitable metal protectors or substantial flexible flaps on the rearmost wheels of such vehicle or combination of vehicles to prevent, as far as practicable, the wheels from throwing dirt, water, or other materials on the windshields of following vehicles.

Such protectors or flaps shall have a ground clearance of not more than one third of the distance from the center of the rearmost axle to the center of the flaps under any conditions of loading of the vehicle, and they shall be at least as wide as the tires they are protecting.

If the vehicle is so designed and constructed that such requirements are accomplished by means of fenders, body construction, or other means of enclosure, then no such protectors or flaps are required.

Rear wheels not covered at the top by fenders, bodies, or other parts of the vehicle shall be covered at the top by protective means extending at least to the center line of the rearmost axle.

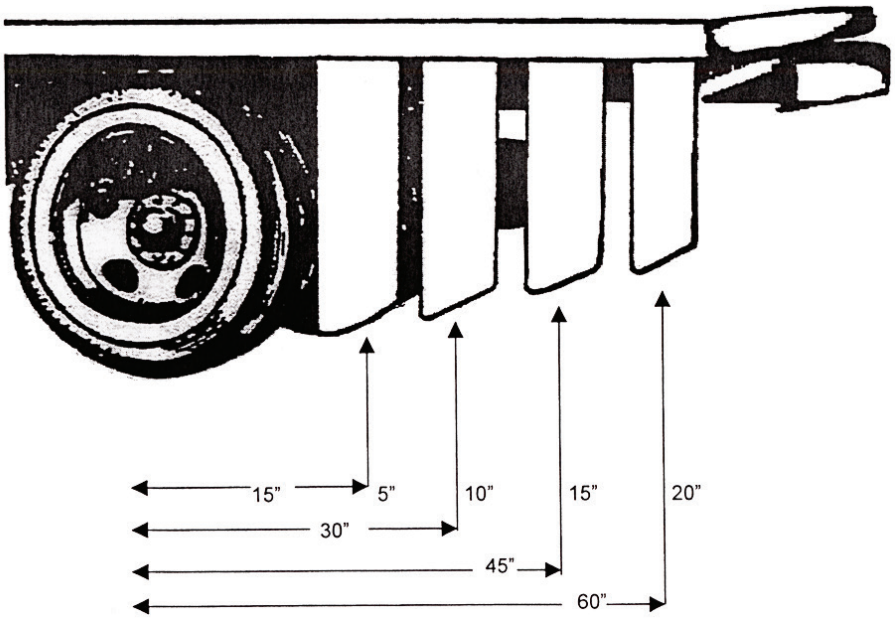

Example
If the wheel protector is 15 inches behind the center of the axle, then the wheel protector ground clearance may be no more than five inches.

The distance from the center of the axle, to the wheel protector, divided by three, equals the maximum ground clearance.

Vehicle Size

SOURCE: OHIO REVISED CODE §5577.05

Size requirements in Ohio vary and must be understood by both the motor carrier as well as the commercial motor vehicle driver. The next several pages will address frequently asked questions as well as the basic regulations. While every vehicle configuration cannot be addressed, this guide will highlight the majority.

HIGHWAY TYPES

This first consideration a carrier or driver needs to take is the type of route to be traveled.

Ohio has several types of routes with each having varying regulations and restrictions.

IS – Interstate Route

US – United States Route

SR – State Route

CR – County Road

TR – Township Road

CS – City Street

TP – Turnpike (Tollroad)

Users of these routes should also consider both bridge and construction restrictions. The Ohio Department of Transportation Web site addresses the majority of these restrictions. Local authorities should be contacted for county, township and city routes.

LOAD OVERHANG

Any amount of load overhang from the rear of the vehicle is allowable as long as the legal length is not exceeded.

Any overhang that exceeds four (4) feet from the rear of the vehicle must display a red flag, with a size not less than 16 inches square (ORC 4513.09).

At times when lighted lights are required (ORC 4513.03), a red light or lantern, plainly visible from a distance of 500 feet must be displayed.

SPECIAL HAULING PERMITS

Vehicles or vehicles hauling loads in excess of the legal dimensions must operate under a Special Hauling Permit.

ROADWAY	HAULING PERMIT JURISDICTION
Interstates U.S. Routes State Routes	Ohio Department of Transportation Special Hauling Permit Section (614) 351-2300 WWW.DOT.STATE.OH.US/PERMITS
Ohio Turnpike	Ohio Turnpike Commission (440) 234-2081 WWW.OHIOTURNPIKE.ORG
All other roads	Local governmental jurisdiction (county, city, township) who has authority over the travel route/road.
	The Ohio Revised Code (ORC) Section 4513.34 requires that all vehicles that exceed maximum legal dimensions and weights are required to obtain written permission from the governmental jurisdiction (county, city, township) who has authority over the travel route/road. Without this written authorization from the appropriate local government, oversize and/or overweight vehicles may NOT travel on their roadways.

Vehicle Size

SOURCE: OHIO REVISED CODE §5577.05

VEHICLE WIDTH AND HEIGHT RESTRICTIONS

Ohio Revised Code §5577.05(A) addresses the restrictions of allowable width of vehicles traveling Ohio's roadways. The following guidelines apply to roadways not restricted due to constructions, detours or city restrictions.

WIDTH (Excludes safety devices permitted by law.)	WIDTH ALLOWED	HEIGHT ALLOWED (All vehicles operating within the state of Ohio.)
All vehicles except a municipal bus or traction engine.	8' 6"	13' 6"
Municipal Bus	8' 8"	13' 6"
Traction engine	11'	13' 6"

VEHICLE LENGTH

Ohio Revised Code §5577.05(B) addresses all vehicle lengths. The following guide should address most vehicle configurations.

TYPE OF VEHICLE	LENGTH
Passenger bus operated by a regional transit authority.	66'
Length of all other passenger bus type vehicles and recreational vehicles.	45'
Length of automobile or boat transporter. (allowed 3 foot overhang to the front) (allowed 4 foot overhang to the rear)	65'
Saddlemount vehicle transporter (piggyback) when operated on any interstate, United States route, or state route, including reasonable access travel on all other roadways for a distance not to exceed one road mile from any interstate, United States route, or state route.	97'
Saddlemount vehicle transporter (Piggyback) when operated on any non-interstate, United States route, or state route.	75'
Length of any stinger steered auto or boat transporter. (allowed 3 foot overhang to the front) (allowed 4 foot overhang to the rear)	75'
Length of semi-trailer used in a commercial tractor semi trailer combination including the load.	53'
Length of semi-trailer or full trailer used in a commercial tractor/semi-trailer/trailer combination.	28' 6"
Length of all other vehicles.	50'
Length of any other combinations.	65'

Ohio Motor Vehicle Weight Law

SOURCE: OHIO REVISED CODE §5577.04

(A) The maximum wheel load of any one wheel of any vehicle, trackless trolley, load, object, or structure operated or moved upon improved public highways, streets, bridges, or culverts shall not exceed 650 pounds per inch width of pneumatic tire, measured as prescribed by Ohio Revised Code §5577.03.

(B) The weight of vehicle and load imposed upon a road surface that is part of the interstate system by vehicles with pneumatic tires shall not exceed any of the following weight limitations:

1) On any one axle: 20,000 pounds;
2) On any tandem axle: 34,000 pounds;
3) On any two or more consecutive axles: the maximum weight as determined by application of the formula provided in ORC §5577.04(C).

(C) For purposes of ORC §5577.04(B)(3), the maximum gross weight on any two or more consecutive axles shall be determined by application of the following formula:

$$W = 500((LN/N-1) + 12N + 36)$$

In this formula, **W** is the overall gross weight on any group of two or more consecutive axles to the nearest 500 pounds.

L is the distance in rounded whole feet between the extreme of any group of two or more consecutive axles.

N is the number of axles in the group under consideration. However, two consecutive sets of tandem axles may carry a gross load of 34,000 pounds each, provided the overall distance between the first and last axles of such consecutive sets of tandem axles is 36' or more.

(D) Except as provided in ORC §5577.04(I), the weight of vehicle and load imposed upon a road surface that is not part of the interstate system, by vehicles with pneumatic tires, shall not exceed any of the following weight limitations:

1) On any one axle: 20,000 pounds;
2) On any two successive axles:
   (a) Spaced 4' or less apart and weighed simultaneously: 24,000 pounds;
   (b) Spaced more than 4' apart, and weighed simultaneously, 34,000 pounds, plus 1,000 pounds per foot or fraction thereof, over 4', not to exceed 40,000 pounds.
3) On any three successive load-bearing axles designed to equalize the load between such axles and spaced so that each such axle of the three-axle group is more than 4' from the next axle in the three-axle group and so that the spacing between the first axle and the third axle of the three-axle group is no more than 9', and with such load-bearing three-axle group weighed simultaneously as a unit:
   (a) 48,000 pounds, with the total weight of vehicle and load not exceeding 38,000 pounds plus an additional 900 pounds for each foot of spacing between the front axle and the rearmost axle of vehicle;
   (b) As an alternative to §5577.04(D)(3)(a), 42,500 pounds: if part of a six-axle vehicle combination with at least 20' between the front axle and rearmost axle, with the total weight of vehicle and load not exceeding 54,000 pounds plus an additional 600 pounds for each foot of spacing between the front axle and the rearmost axle of the vehicle.
4) The total weight of vehicle and load utilizing any combination of axles, other than as provided for three-axle groups in §5577.04(D), shall not exceed 38,000 pounds plus an additional 900 pounds for each foot of spacing between the front axle and the rearmost axle of the vehicle.

SOURCE: OHIO REVISED CODE §5577.04

(E) Notwithstanding §5577.04(B) and (D), the maximum overall gross weight of vehicle and load imposed upon the road surface shall not exceed 80,000 pounds.

(F) Notwithstanding any other provision of law, when a vehicle is towing another vehicle, such drawbar of other connection shall be of a length such as will limit the spacing between nearest axles of the respective vehicles to a distance not in excess of 12' 6".

(G) As used in §5577.04(B), “tandem axle” means two or more consecutive axles whose centers may be included between parallel transverse vertical planes spaced more than 40' but no more than 96' apart, extending across the full width of the vehicle.

(H) This section does not apply to passenger bus-type vehicles operated by a regional transit authority pursuant to Ohio Revised Code §306.30 - 306.54.

(I) Either §5577.04(B) or (D) applies to the weight of a vehicle and its load imposed upon any road surface that is not part of the interstate system by vehicles with pneumatic tires. As between §5577.04(B) or (D), only the division that yields the highest total gross vehicle weight limit shall be applied to any such vehicle. Once that division is determined, only the limits contained in the subdivisions of that division shall apply to that vehicle.

Ohio Motor Vehicle Weight Law

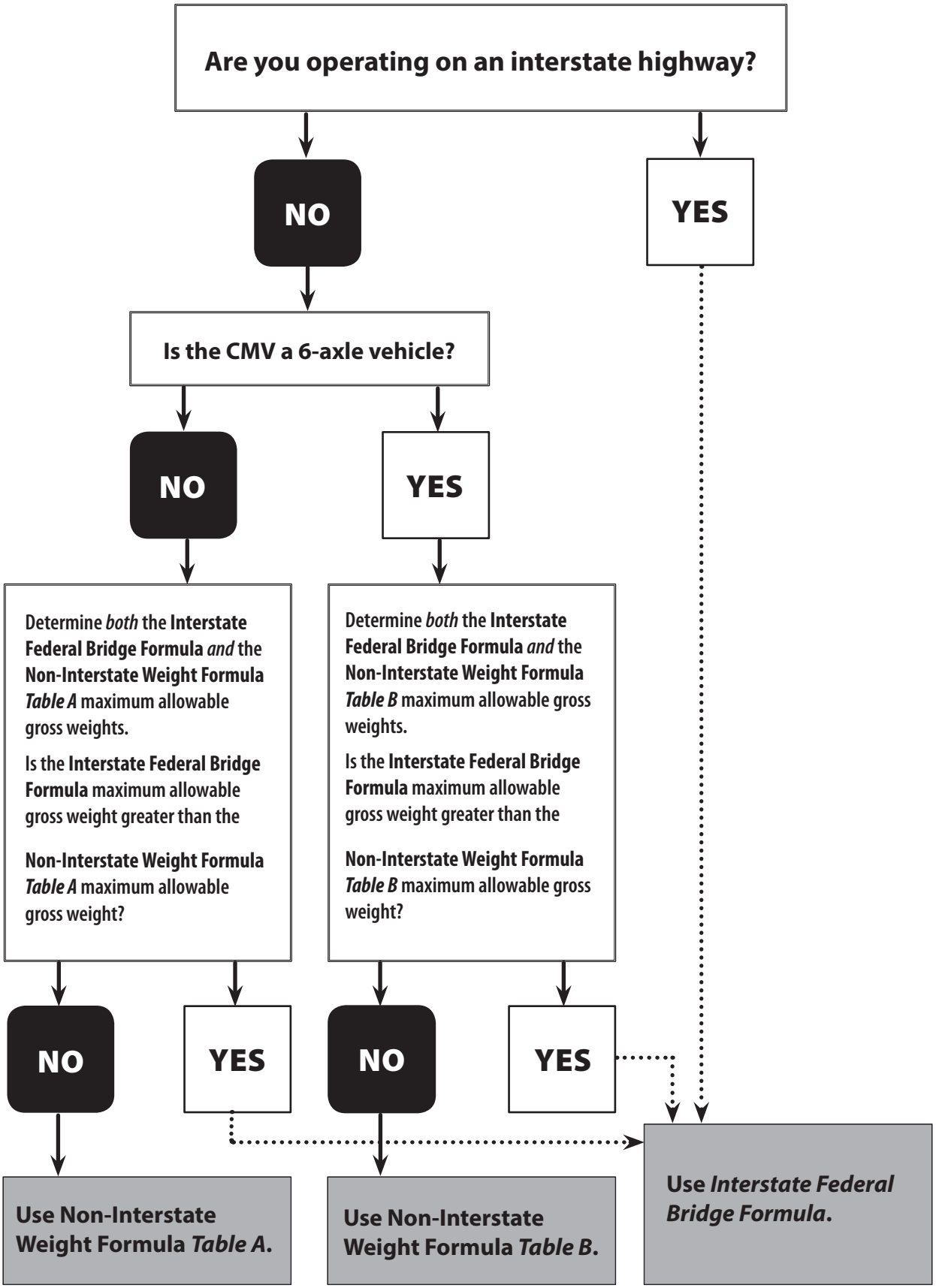

SOURCE: OHIO REVISED CODE §5577.042

Ohio exceptions regarding weight provisions for farm trucks, farm machinery, log trucks, coal trucks and solid waste disposal trucks.

(A) As used in this section:
1) "Farm machinery" has the same meaning as in section 4501.01 of the Revised Code.
2) "Farm commodities" includes livestock, bulk milk, corn, soybeans, tobacco, and wheat.
3) "Farm truck" means a truck used in the transportation from a farm of farm commodities when the truck is operated in accordance with this section.
4) "Log truck" means a truck used in the transportation of timber from the site of its cutting when the truck is operated in accordance with this section.
5) "Coal truck" means a truck transporting coal from the site where it is mined when the truck is operated in accordance with this section.
6) "Solid waste" has the same meaning as in section 3734.01 of the Revised Code.
7) "Solid waste haul vehicle" means a vehicle hauling solid waste for which a bill of lading has not been issued.

(B)(1) Notwithstanding sections 5577.02 and 5577.04 of the Revised Code, the following vehicles under the described conditions may exceed by no more than seven and one-half per cent the weight provisions of sections 5577.01 to 5577.09 of the Revised Code and no penalty prescribed in section 5577.99 of the Revised Code shall be imposed:
a) A coal truck transporting coal, from the place of production to the first point of delivery where title to the coal is transferred;
b) A farm truck or farm machinery transporting farm commodities, from the place of production to the first point of delivery where the commodities are weighed and title to the commodities is transferred;
c) A log truck transporting timber, from the site of its cutting to the first point of delivery where the timber is transferred;
d) A solid waste haul vehicle hauling solid waste, from the place of production to the first point of delivery where the solid waste is disposed of or title to the solid waste is transferred.

(2) In addition, if any of the vehicles listed in division (B)(1) of this section and operated under the conditions described in that division does not exceed by more than seven and one-half per cent the gross vehicle weight provisions of sections 5577.01 to 5577.09 of the Revised Code and does not exceed the wheel or axle-load limits of those sections by more than seven and one-half per cent, no penalty prescribed in section 5577.99 of the Revised Code for a wheel or axle overload shall be imposed.

(C) If any of the vehicles listed in division (B)(1) of this section and operated under the conditions described in that division exceeds the weight provisions of sections 5577.01 to 5577.09 of the Revised Code by more than the percentage allowance of either division (B)(1) or (2) of this section, both of the following apply without regard to the allowance provided by division (B)(1) or (2) of this section:
1) The applicable penalty prescribed in section 5577.99 of the Revised Code;
2) The civil liability imposed by section 5577.12 of the Revised Code.

(D)(1) Division (B) of this section does not apply to the operation of a farm truck, log truck, or farm machinery transporting farm commodities during the months of February and March.

(2) Regardless of when the operation occurs, division (B) of this section does not apply to the operation of a vehicle on either of the following:
1) A highway that is part of the interstate system;
2) A highway, road, or bridge that is subject to reduced maximum weights under section 4513.33, 5577.07, 5577.071, 5577.08, 5577.09, or 5591.42 of the Revised Code.

SOURCE: OHIO REVISED CODE §5577.043

Ohio exceptions regarding weight provisions for farm trucks, farm machinery, log trucks, coal trucks and solid waste disposal trucks.

(A) Notwithstanding sections 5577.02 and 5577.04 of the Revised Code, the following vehicles under the described conditions may exceed by no more than seven and one-half per cent the weight provisions of sections 5577.01 to 5577.09 of the Revised Code and no penalty prescribed in section 5577.99 of the Revised Code shall be imposed:

1) A surface mining truck transporting minerals from the place where the minerals are loaded to any of the following:
   a) The construction site where the minerals are discharged;
   b) The place where title to the minerals is transferred;
   c) The place of processing.
2) A vehicle transporting hot mix asphalt material from the place where the material is first mixed to the paving site where the material is discharged;
3) A vehicle transporting concrete from the place where the material is first mixed to the site where the material is discharged;
4) A vehicle transporting manure, turf, sod, or silage from the site where the material is first produced to the first place of delivery;
5) A vehicle transporting chips, sawdust, mulch, bark, pulpwood, biomass, or firewood from the site where the product is first produced or harvested to the first point where the product is transferred.

(B) In addition, if any of the vehicles listed in division (A) of this section and operated under the conditions described in that division do not exceed by more than seven and one-half per cent the gross vehicle weight provisions of sections 5577.01 to 5577.09 of the Revised Code and do not exceed the wheel or axle load limits of those sections by more than seven and one-half per cent, no penalty prescribed in section 5577.99 of the Revised Code for a wheel or axle overload shall be imposed.

(C) If any of the vehicles listed in division (A) of this section and operated under the conditions described in that division exceed the weight provisions of sections 5577.01 to 5577.09 of the Revised Code by more than the percentage allowance of either division (A) or (B) of this section, both of the following apply without regard to the allowance provided by division (A) or (B) of this section:

1) The applicable penalty prescribed in section 5577.99 of the Revised Code;
2) The civil liability imposed by section 5577.12 of the Revised Code.

(D) Divisions (A) and (B) of this section do not apply to the operation of a vehicle listed in division (A) of this section on either of the following:

1) A highway that is part of the interstate system;
2) A highway, road, or bridge that is subject to reduced maximum weights under section 4513.33, 5577.07, 5577.071, 5577.08, 5577.09, or 5591.42 of the Revised Code.

SOURCE: OHIO REVISED CODE §5577.044

Weight restrictions for vehicles fueled by natural gas.

(A) Notwithstanding sections 5577.02 and 5577.04 of the Revised Code, a vehicle fueled solely by compressed natural gas may exceed by not more than two thousand pounds the gross vehicle weight provisions of sections 5577.01 to 5577.09 of the Revised Code or the axle load limits of those sections.

(B) If a vehicle described in division (A) of this section exceeds the weight provisions of sections 5577.01 to 5577.09 of the Revised Code by more than the allowance provided for in division (A) of this section, both of the following apply:

1) The applicable penalty prescribed in section 5577.99 of the Revised Code;
2) The civil liability imposed by section 5577.12 of the Revised Code.

(C) Division (A) of this section does not apply to the operation of a vehicle on either of the following:

1) A highway that is part of the interstate system;
2) A highway, road, or bridge that is subject to reduced maximum weights under section 4513.33, 5577.07, 5577.071, 5577.08, 5577.09, or 5591.42 of the Revised Code.

Bridge Formula Definitions

SOURCE: OHIO REVISED CODE §5577.04B

The following definitions are used in conjunction with the Bridge Formula Table.

GROSS WEIGHT

The weight of a vehicle combination without load plus the weight of any load thereon.

The maximum overall gross weight of vehicle and load imposed upon the road surface shall not exceed 80,000 pounds.

SINGLE AXLE WEIGHT

The total weight imposed upon the road surface by all wheels whose centers may be included between two parallel transverse vertical planes 40' apart, extended across the full width of the vehicle.

The maximum single axle weight shall not exceed 20,000 pounds.

TANDEM AXLE WEIGHT

The total weight imposed upon the road surface by two or more consecutive axles whose centers may be included between parallel transverse vertical planes spaced more than 40' but not more than 96' apart, extending across the full width of the vehicle.

The maximum tandem axle weight shall not exceed 34,000 pounds.

CONSECUTIVE AXLE WEIGHT

Any consecutive two or more axles may not exceed the weight as computed by the formula even though the single axles, tandem axles and gross weights are within the legal requirements.

CHECKING A VEHICLE

This illustration of a tractor semitrailer combination is used to illustrate a Bridge Formula check.

Before beginning to check your vehicle, ensure:

- the single axle 1 does not exceed 20,000 lbs.,
- tandem axles 2 – 3 and 4 – 5 do not exceed 34,000 lbs. each, and
- the gross vehicle weight does not exceed 80,000 lbs.

If these weight requirements are satisfactory, the following combinations should be checked as follows:

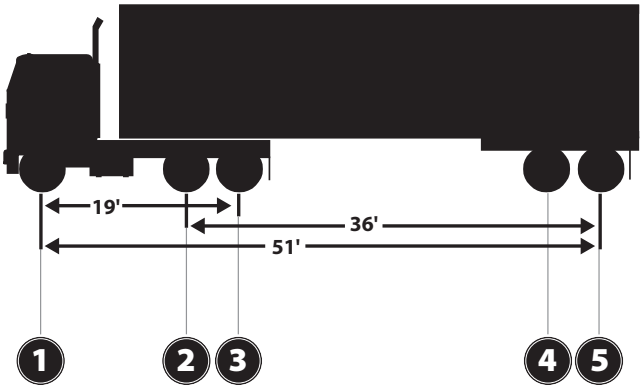

Axle **1** is 12,000 lbs.
Axles **2, 3, 4** and **5** are 17,000 lbs. each.

These are the minimum axle spacings required to comply with the *Federal Bridge **Gross** Weight Formula.*

Bridge Formula Examples

SOURCE: OHIO REVISED CODE §5577.04B

Check axles 1 through 3 using the illustration.
W (actual weight) =
12,000 + 17,000 + 17,000 = 46,000 lbs.

N = 3 axles; L = 21 feet

W = Maximum

$$= 500 \left[\frac{L\,(N)}{(N - 1)} + 12\,(N) + 36 \right]$$

$$= 500 \left[\frac{(21' x 3)}{(3 - 1)} + (12 \times 3) + 36 \right]$$

$$= 51{,}500 \text{ lbs.}$$

The actual weight of axles 1 through 3 of the illustrated combination is 46,000 lbs. so the Bridge Formula requirement is satisfied.

To use the Bridge Formula Table to obtain the maximum load allowed on axles 1 through 3, read down the left column (Distance in feet between ...axles) to L = 21 and across the number of axles to the right to N = 3 Axles.

Now check axles 1 through 5 using the illustration and table.

W (actual weight) =
12,000 + 17,000 + 17,000 + 17,000 + 17,000 = 80,000 lbs.

N = 5 axles; L = 51 feet

W = Maximum from the table for L of 51 feet and N of 5 (axles) is 80,000 lbs.

This axles spacing is satisfactory.

Now check axles 2 through 5 using the illustration below and table.

W (actual weight) =
17,000 + 17,000 + 17,000 + 17,000 = 68,000 lbs.

N = 4 axles; L = 34 feet

W maximum from the table for L = 34 feet and N = 4 (axles) is 64,500 lbs.

This means the illustration shows a violation; the actual weight of 68,000 lbs. exceeds the maximum allowable weight of 64,500 lbs. for the given axle spacing.

To correct the situation, some load must be removed from the vehicle or the 34-foot axle spacing must be increased.

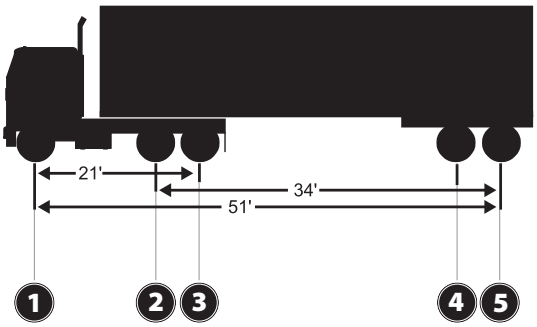

Axle **1** is 12,000 lbs.
Axles **2, 3, 4** and **5** are 17,000 lbs. each; therefore, the illustration **shows a spacing violation on axles 2 – 5**.

EXCEPTION TO FORMULA

There is ***one exception*** to the use of the formula and table:
Two consecutive sets of tandem axles may carry a gross load of 34,000 lbs. each, providing the overall distance between the first and last axles of such consecutive sets of tandem axles is 36 feet or more.

For example, a 5-axle tractor-semitrailer may be used to haul a full 34,000 lbs. on the trailer (axles 4 and 5) providing there is a spacing of 36 or more feet between axles 2 and 5.

A spacing of 36 feet or more for axles 2 through 5 is satisfactory for an actual weight of 68,000 lbs. even though the formula or table computes weight maximum to be 66,000 to 67,500 lbs. for spacing of 36 to 38 feet.

• INTERSTATE BRIDGE FORMULA •

ORC§5577.04 Paragraph B Reference Chart

Permissible gross loads for vehicles in regular operation.

Based on weight formula $W = 500 \left[\frac{L(N)}{(N-1)} + 12(N) + 36 \right]$

W = The maximum weight in pounds that can be carried on a group of two or more axles to the nearest 500 pounds.

L = Spacing in feet between the outer axles of any two or more consecutive axles.

N = Number of axles being considered.

Maximum load in pounds carried on any group of 2 or more consecutive axles.

Distance in feet between extremes of 2 or more consecutive axles.

DISTANCE	2 AXLES	3 AXLES	4 AXLES	5 AXLES	6 AXLES	7 AXLES
4	34,000					
5	34,000					
6	34,000					
7	34,000					
8 or less	34,000	34,000				
More than 8	38,000	42,000				
9	39,000	42,500				
10	40,000	43,500				
11		44,000				
12		45,000	50,000			
13		45,500	50,500			
14		46,500	51,500			
15		47,000	52,000			
16		48,000	52,500	58,000		
17		48,500	53,500	58,500		
18		49,500	54,000	59,000		
19		50,000	54,500	60,000		
20		51,000	55,500	60,500	66,000	
21		51,500	56,000	61,000	66,500	
22		52,500	56,500	61,500	67,000	
23		53,000	57,500	62,500	68,000	
24		54,000	58,000	63,000	68,500	74,000
25		54,500	58,500	63,500	69,000	74,500
26		55,500	59,500	64,000	69,500	75,000
27		56,000	60,000	65,000	70,000	75,500
28		57,000	60,500	65,500	71,000	76,500
29		57,500	61,500	66,000	71,500	77,000
30		58,500	62,000	66,500	72,000	77,500
31		59,000	62,500	67,500	72,500	78,000
32		60,000	63,500	68,000	73,000	78,500
33			64,000	68,500	74,000	79,000
34			64,500	69,000	74,500	80,000
35			65,500	70,000	75,000	
36		Exception 23 U.S.C. 127	66,000	70,500	75,500	
37			66,500	71,000	76,000	
38			67,500	71,500	77,000	
39			68,000	72,500	77,500	
40			68,500	73,000	78,000	
41			69,500	73,500	78,500	
42			70,000	74,000	79,000	
43			70,500	75,000	80,000	
44			71,500	75,500		
45			72,000	76,000		
46			72,500	76,500		
47			73,500	77,500		
48			74,000	78,000		
49			74,500	78,500		
50			75,500	79,000		
51			76,000	80,000		
52			76,500			
53			77,500			
54			78,000			
55			78,500			
56			79,500			
57		Gross Weight Limit*	80,000			

*Maximum Gross Weight allowed in the state of Ohio is 80,000 pounds.

ORC §5577.04 Paragraph D

SOURCE: OHIO REVISED CODE §5577.04D

The following text is a synopsis, please refer to ORC §5577.04D for the complete text.

Except as provided in division (I) of this section, the weight of vehicle and load imposed upon a road surface that is not part of the interstate system by vehicles with pneumatic tires shall not exceed any of the following weight limitations:

1. On one axle – not to exceed 20,000 lbs.
2. Total on two successive axles spaced four feet or less, center to center, not to exceed 24,000 lbs.
3. Total on two successive axles spaced in excess of four feet and not more than ten feet apart, center to center, equals 34,000 lbs. plus 1,000 lbs. for each foot, or fraction thereof, over four feet, not to exceed 40,000 lbs.

   For example:
   4' 1" through 5' = 35,000 lbs.

   9' 1" through 10' = 40,000 lbs.
   Maximum
4. Total on three successive axles designed to equalize the load on the axles and spaced more than four feet between each axle and not more than nine feet between the first and third axles of the group, center to center, not to exceed 48,000 lbs. when applying Table A, not exceed 42,500 lbs. when applying Table B.
5. Gross weight limit on any vehicle and load or combination of vehicles and load is as follows:
   A. Refer to Table A (application to all vehicles)
   Any vehicle or combination of vehicles shall not exceed 38,000 lbs. plus 900 lbs. for each foot of spacing between the front and rear most axles of the vehicle or combination, or 80,000 lbs., whichever is less.
   B. Refer to Table B (applicable to six axle vehicles only)
   A six axle vehicle combination with at least twenty feet of spacing between the front axle and the rear most axle, shall not exceed 54,000 lbs. plus 600 lbs. for each foot of spacing between the front and rear most axles of vehicle combination, or 80,000 lbs., whichever is less.
6. Wheel load shall not exceed 650 lbs. per inch width of tire.

ORC §5577.04 Paragraph D Reference Chart

Maximum Allowable Load for Various Distances (in feet) Center to Center of Extreme Axles

Feet	Table A Pounds	Table B Pounds	Feet	Table A Pounds	Table B Pounds	Feet	Table A Pounds	Table B Pounds
3	24,000		20	56,000	66,000	36	70,400	75,600
4	24,000		21	56,900	66,600	37	71,300	76,200
4.5	35,000		22	57,800	67,200	38	72,200	76,800
5	35,000		23	58,700	67,800	39	73,100	77,400
6	36,000		24	59,600	68,400	40	74,000	78,000
7	37,000		25	60,500	69,000	41	74,900	78,600
8	38,000		26	61,400	69,600	42	75,800	79,200
9	39,000		27	62,300	70,200	43	76,700	79,800
10	40,000		28	63,200	70,800	44	77,600	80,000
11	47,900		29	64,100	71,400	45	78,500	80,000
12	48,800		30	65,000	72,000	46	79,400	80,000
13	49,700		31	65,900	72,600	47	80,000	80,000
14	50,600		32	66,800	73,200	48	80,000	80,000
15	51,500		33	67,700	73,800			
16	52,400		32	66,800	73,200			
17	53,300		33	67,700	73,800			
18	54,200		34	68,600	74,400			
19	55,100		35	69,500	75,000			

5577.01 Definitions.

5577.02 Operation of vehicle on highways in excess of prescribed weights forbidden.

5577.03 Weight of load; width of tire.

5577.04 Maximum axle load, wheel load, gross weights, for pneumatic tired vehicles.

5577.041 Maximum axle load, wheel load, and gross weights for solid-tired vehicles.

5577.042 Weight provisions for coal, farm, or log truck or solid waste haul vehicle.

5577.043 Permissible weight variations for certain vehicles.

5577.044 Weight restrictions for vehicles fueled by natural gas.

5577.05 Maximum width, height, and length.

5577.06 Prohibition against violation.

5577.07 Reduction of weight and speed during times of thaws and moisture.

5577.071 Reduction of weight or speed on deteriorated or vulnerable bridge.

5577.08 Classification of roads and bridges by board of county commissioners.

5577.09 Rules; signs.

5577.10 Statement of gross vehicle weight.

5577.11 Wheel protectors.

5577.12 Liability for damages; prosecution; application of moneys.

5577.13 Enforcement by deputies.

5577.14 Notice of arrest.

5577.15 Towing or removing wrecked or disabled motor vehicle.

5577.99 Penalties.

Notes

Notes

WWW.PUBLICSAFETY.OHIO.GOV

10-0446-00 OHP1210 7/13 [760-1109]